POLYTRONIX, INC.

PG-322408 Series

OUTLINE DIMENSION

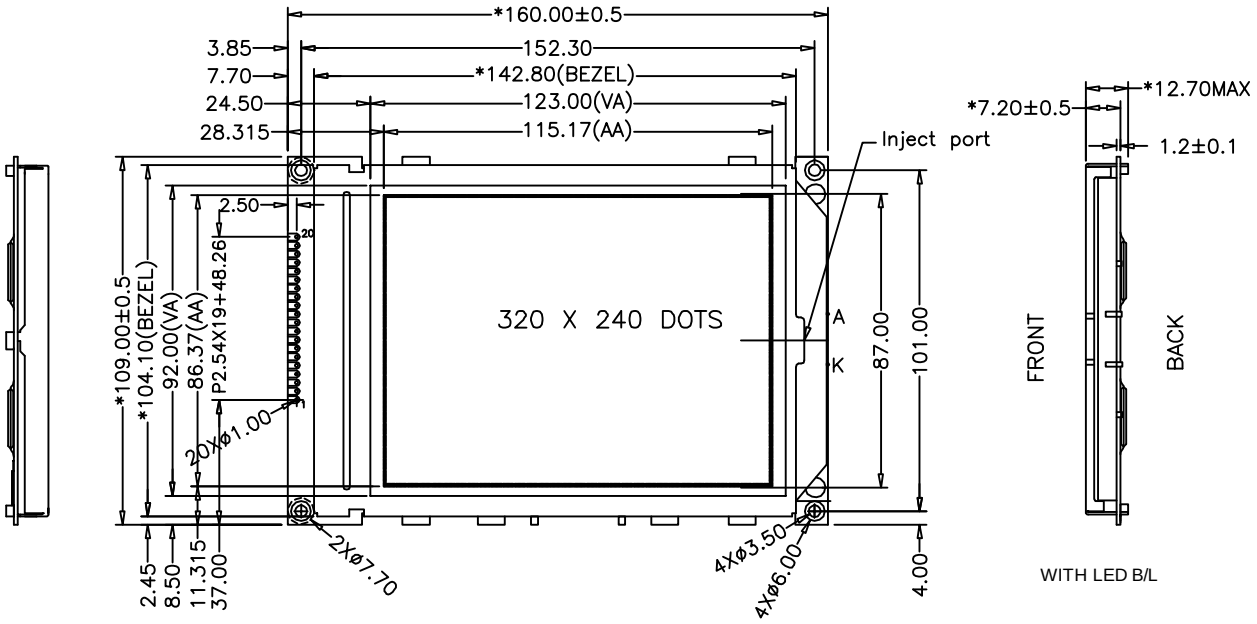

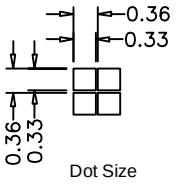

MECHANICAL DIMENSION	
Overall Dimension (mm)	160.0 X 109.0 X 12.7
Viewing Area (mm)	123.0 X 92.0
Format	320 SEG × 240 COM
Dot Size (mm)	0.33 X 0.33
Dot Pitch (mm)	0.36 X 0.36

ADSOLUTE MAXIMUM RATINGS				
Parameter	Symbol	MIN	MAX	Unit
Supply Voltage for Logic	Vdd-Vss	- 0.3	+5.0	V
Supply Voltage for LCD	Vlcd		22.7	V
Input Voltage	Vin	- 0.3	Vdd + 0.3	V

ELECTRICAL CHARACTERISTICS (VDD=5.0V ; Top=25° C)					
Parameter	Symbol	MIN	Typical	MAX	Unit
Power Supply Voltage	Vdd-Vss		5.0		V
LCD Operating Voltage	Vop		23.8		V
LCM Current Comsumption	Idd				mA
Backlight Current Consumption	LED (Edge)				mA
	LED (Array)				mA
Driving Method	1/240 Duty 1/12 Bias				

PIN ASSIGMENT		
Pin No.	Symbol	Function
1	GND	Power Supply (GND)
2	VCC	
3	V0	Contrast Adjust
4	WR	Data Read / write
5	RD	
6	CS	
7	A0	
8	RST	
9	DB0	Data Bus Line
10	DB1	Data Bus Line
11	DB2	Data Bus Line
12	DB3	Data Bus Line
13	DB4	Data Bus Line
14	DB5	Data Bus Line
15	DB6	Data Bus Line
16	DB7	Data Bus Line
17	NC	
18	VEE	
19	LEDA	Power Supply for LED B/L (-)
20	LEDK	Power Supply for LED B/L (+)

NOTES

IC Controller / Driver: **RA8835**
LCD : **Blue STN**
Backlight : **White LED**
Viewing Angle: **6:00**
Operating Temperature : **-20° C~+70° C**
Storage Temperature : **-30° C~+80° C**